SPECIAL INSTRUCTIONS: NO	PART NO.	A97011–031	REV	ECO	DATE	APP
			B	111496	03–17–25	BAS

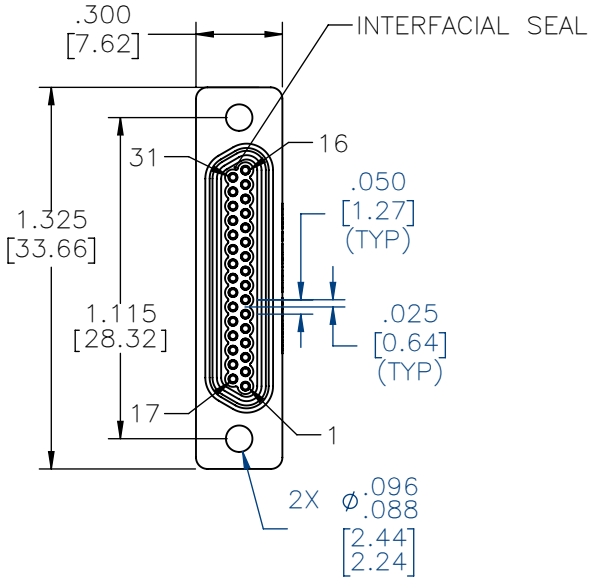

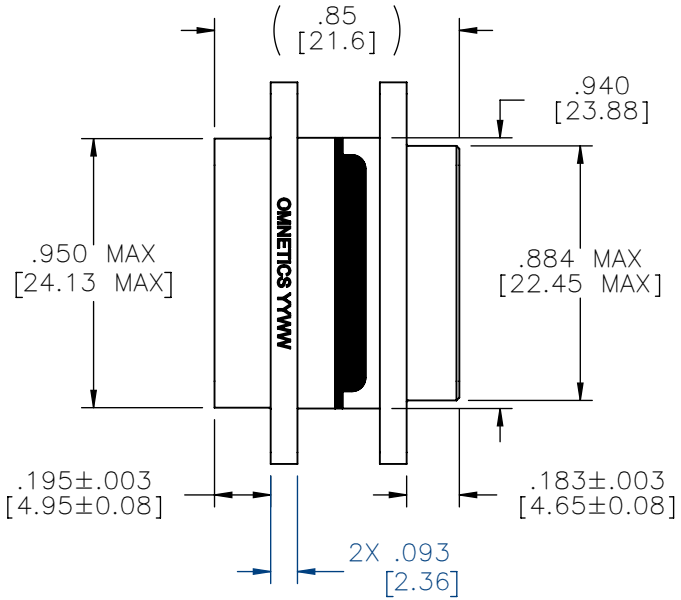

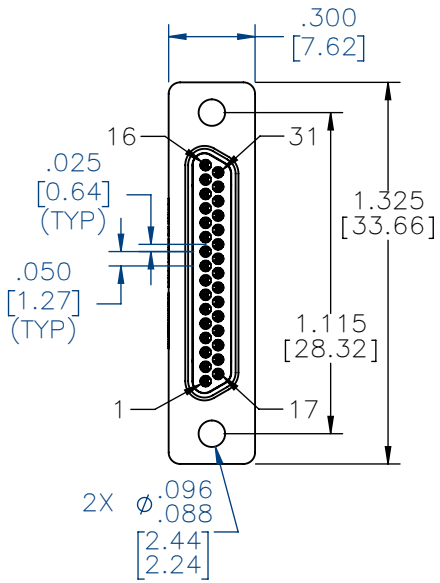

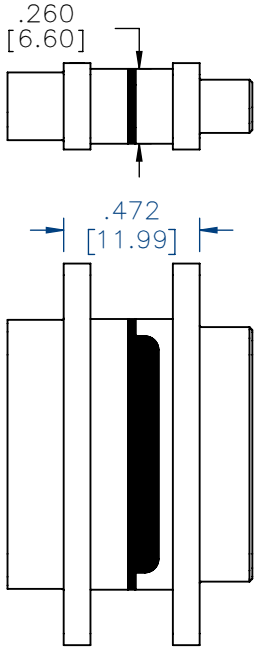

MATERIALS

HOUSING:
ALUMINUM 6061, NICKEL PLATE (500 MICROINCHES MINIMUM) PER SAE–AMS–2404

INSULATOR:
LIQUID CRYSTAL POLYMER (LCP) PER ASTM D5138

MALE CONTACT:
BERYLLIUM COPPER PER ASTM B194, C17200, GOLD PLATED PER ASTM B488, (HARD GOLD) TYPE II CODE C, CLASS 1.27

FEMALE CONTACT:
COPPER ALLOY PER MIL–DTL–83513, GOLD PLATED PER ASTM B488, (HARD GOLD) TYPE II CODE C CLASS 1.27

INTERFACIAL SEAL:
SILICONE RUBBER PER A–A–59588

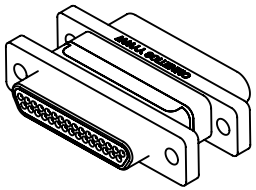

ACTUAL SIZE

NOTES:

1. DIMENSIONS IN [ ] ARE IN MILLIMETERS UNLESS OTHERWISE NOTED AND ARE FOR REFERENCE ONLY

MWDZ	THIRD ANGLE	THIS DRAWING CONTAINS CONFIDENTIAL AND PROPRIETARY INFORMATION WHICH IS THE PROPERTY OF OMNETICS CONNECTOR CORP. THIS DOCUMENT MAY NOT, IN WHOLE OR IN PART, BE DUPLICATED, OR DISCLOSED FOR ANY PURPOSE, WITHOUT WRITTEN PERMISSION FROM OMNETICS CONNECTOR CORP.	
	–TOLERANCES– UNLESS OTHERWISE NOTED		
	DIMENSIONS IN INCHES	TITLE:	
SLDW	2 PL DEC ± .01 3 PL DEC ± .005 4 PL DEC ± .0005 ANGLES ± 1°	DFTM. HV DATE 11–03–15	(31) POSITION MICRO-D CONNECTOR SAVER

OMNETICS
CONNECTOR CORPORATION
8840 EVERGREEN BLVD.
MINNEAPOLIS, MN 55433
WWW.OMNETICS.COM

DWG NO.	CAGE CODE 61873	
A97011–031		
SHEET 1 OF 1	SCALE: 3:2	REV B