PART NO.	A54000-025	REV	ECO	DATE	APP
		G	100650	06-17-14	TLM

MATERIAL & SPECIFICATIONS

HOUSING:
ALUMNIUM 6061-T6, NICKEL PLATE PER SAE-AMS-2404.

INSULATOR:
THERMOPLASTIC PER MIL-DTL-32139.

CONTACT:
BERYLLIUM COPPER PER ASTM B194, C17200, GOLD PLATED PER ASTM B488, (HARD GOLD) TYPE II CODE C, CLASS 1.27.

WIRE:
NEMA HP3 TYPE ET, COLOR CODED IAW MIL-STD-681, SYSTEM 1, USING TEN SOLID REPEATING COLORS.

HARDWARE:
303 STAINLESS STEEL PER ASTM 582.

CURRENT RATING:
1 AMP MAX PER MIL-DTL-32139.

PERFORMANCE:
PRODUCT FAMILY TESTED TO AND PASSED THE PERFORMANCE SPECIFICATIONS OF TABLE VIII OF MIL-DTL-32139.

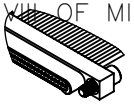

ACTUAL SIZE
EXCLUDING WIRE LENGTH

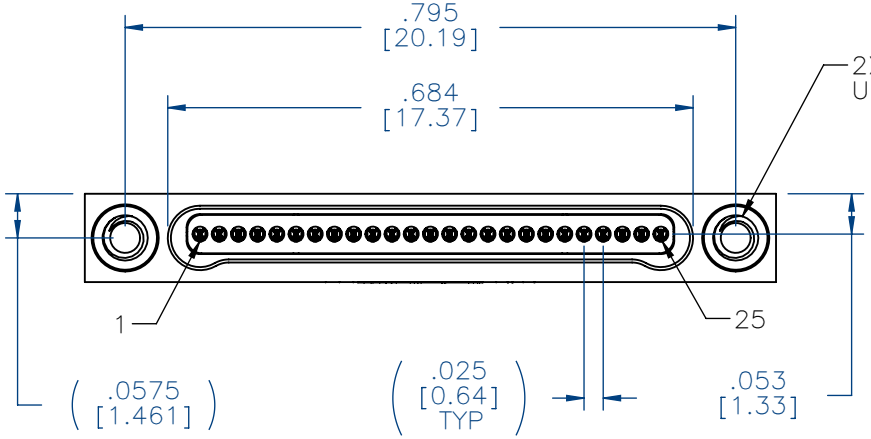

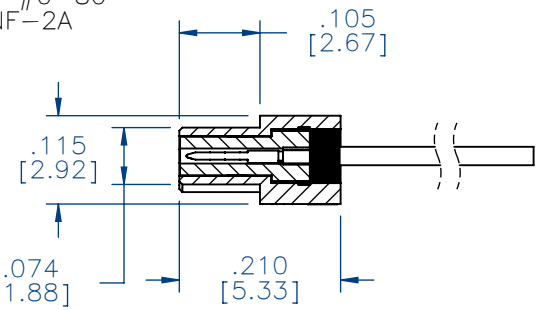

VIEW LESS HARDWARE

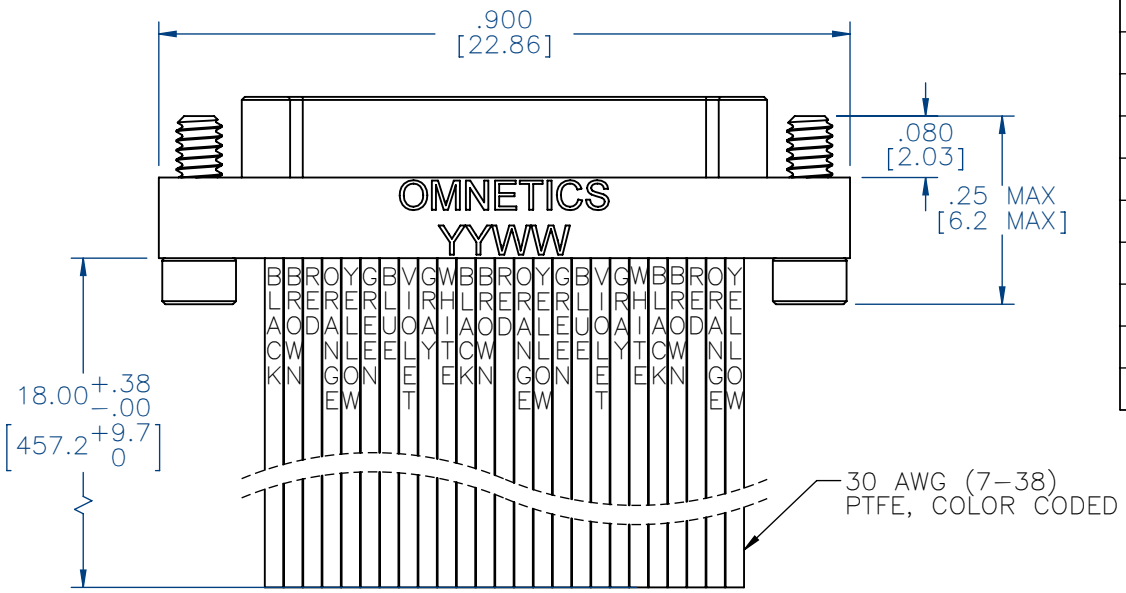

PIN #	COLOR
1, 11, 21	BLACK
2, 12, 22	BROWN
3, 13, 23	RED
4, 14, 24	ORANGE
5, 15, 25	YELLOW
6, 16	GREEN
7, 17	BLUE
8, 18	VIOLET
9, 19	GRAY
10, 20	WHITE

NOTE:

DIMENSIONS IN [ ] ARE IN MILLIMETERS UNLESS OTHERWISE NOTED AND ARE FOR REFERENCE ONLY

MBPS SLDW

THIRD ANGLE
-TOLERANCES-
UNLESS OTHERWISE NOTED
DIMENSIONS IN INCHES
2 PL DEC ± .01
3 PL DEC ± .005
4 PL DEC ± .0005
ANGLES ± 1°

THIS DRAWING CONTAINS CONFIDENTIAL AND PROPRIETARY INFORMATION WHICH IS THE PROPERTY OF OMNETICS CONNECTOR CORP. THIS DOCUMENT MAY NOT, IN WHOLE OR IN PART, BE DUPLICATED, OR DISCLOSED FOR ANY PURPOSE, WITHOUT WRITTEN PERMISSION FROM OMNETICS CONNECTOR CORP.

DFTM. JMJ — DATE 03-31-11
CHK'D. — DATE
APP'D. — DATE

TITLE:
(25) PIN MALE
Bi-Lobe® CONNECTOR
-

OMNETICS CONNECTOR CORPORATION
7260 COMMERCE CIRCLE EAST
MINNEAPOLIS, MN 55432
WWW.OMNETICS.COM

CAGE CODE 61873
DWG NO. A54000-025
SHEET 1 OF 1
SCALE: 4:1
REV G