PART NO.	A50019–031	REV	ECO	DATE	APP
		E	109986	05–25–23	TLM

MATERIALS & SPECIFICATIONS

HOUSING:
ALUMINUM 6061, NICKEL PLATED (500 MICROINCHES MINIMUM) PER SAE–AMS–2404.

INSULATOR:
LIQUID CRYSTAL POLYMER (LCP) PER ASTM 5138

CONTACT:
BERYLLIUM COPPER PER ASTM B194, C17200, GOLD PLATED PER ASTM B488, (HARD GOLD) TYPE II CODE C, CLASS 1.27

TERMINATION:
SOLDER COATED WITH SN63A PER J–STD–006 OR AMS–P–81728

HARDWARE:
303 STAINLESS STEEL PER ASTM A582

CURRENT RATING:
1 AMP MAX PER MIL–DTL–32139

CONTACT RESISTANCE:
71 MILLIOHM MAX (71mV DROP MAX) @ 1.0 AMPS PER MIL–DTL–32139

PERFORMANCE:
PRODUCT FAMILY TESTED TO AND PASSED THE PERFORMANCE SPECIFICATIONS OF TABLE VIII OF MIL–DTL–32139.

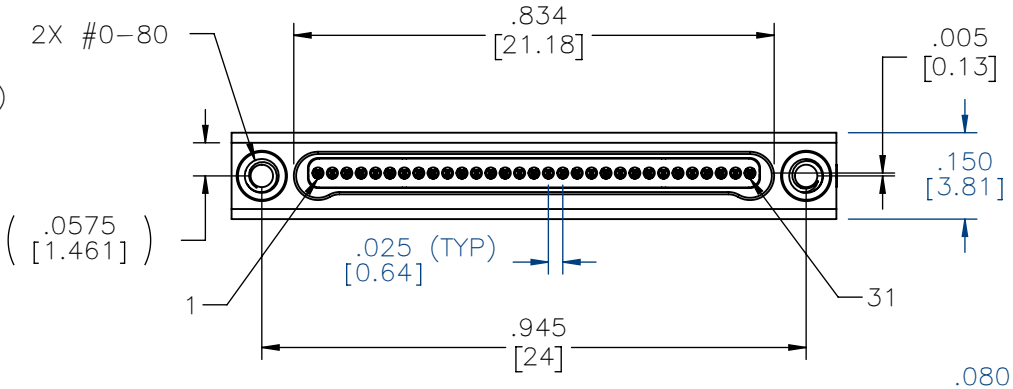

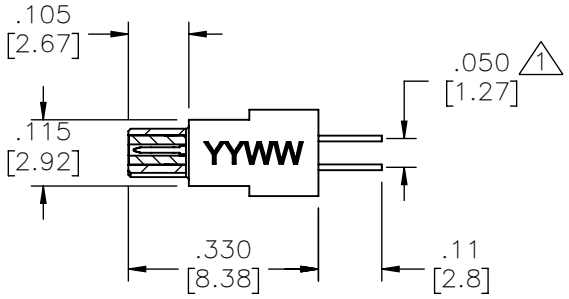

VIEW LESS HARDWARE

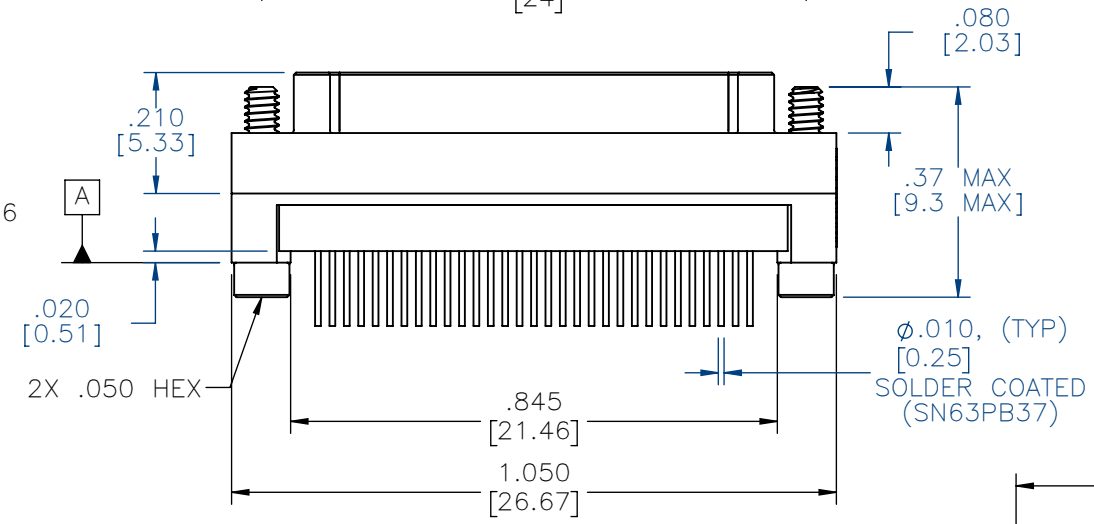

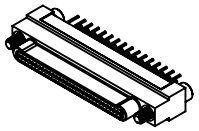

ACTUAL SIZE

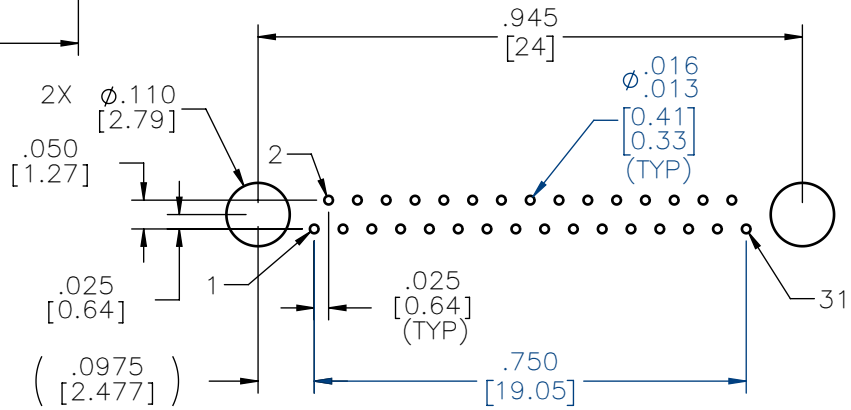

SUGGESTED HOLE PATTERN

NOTES:

1. TAIL DIMENSIONS APPLY AT PLANE A.
2. DIMENSIONS IN [ ] ARE IN MILLIMETERS UNLESS OTHERWISE NOTED AND ARE FOR REFERENCE ONLY

MBPS / SLDW	THIRD ANGLE	THIS DRAWING CONTAINS CONFIDENTIAL AND PROPRIETARY INFORMATION WHICH IS THE PROPERTY OF OMNETICS CONNECTOR CORP. THIS DOCUMENT MAY NOT, IN WHOLE OR IN PART, BE DUPLICATED, OR DISCLOSED FOR ANY PURPOSE, WITHOUT WRITTEN PERMISSION FROM OMNETICS CONNECTOR CORP.	OMNETICS CONNECTOR CORPORATION 8840 EVERGREEN BLVD. MINNEAPOLIS, MN 55433 WWW.OMNETICS.COM
	–TOLERANCES– UNLESS OTHERWISE NOTED DIMENSIONS IN INCHES 2 PL DEC ± .01 3 PL DEC ± .005 4 PL DEC ± .0005 ANGLES ± 1°	TITLE: DFTM. JMJ DATE 10–11–13	(31) PIN MALE SINGLE ROW BI-LOBE® CONNECTOR

DWG NO.	CAGE CODE 61873	
A50019–031		
SHEET 1 OF 1	SCALE: 3:1	REV E